ISAMMA2007

The 1st International Symposium on Advanced Magnetic Materials

May 28-June 1, 2007, Jeju, Korea

Organized by

Research Center for Advanced Magnetic Materials

The Korean Magnetics Society

Sponsored by

Korea Science and Engineering Foundation

Korean Federation of Science and Technology Societies

Research Center for Spin Dynamics and Spin-Wave Devices

RA07

Phase Control and Characterization of Iron and Iron-Oxide Nanocrystals Synthesized by Pulsed Wire Evaporation Method

Hi Min Lee[1], Young Rang Uhm[1], Min Ku Lee[1], Chul Sung Kim[2], and Chang Kyu Rhee[1]*

[1]Nuclear Nano Materials Development Lab., Korea Atomic Energy Research Institute, Daejeon 305-600, Korea

[2]Department of Physics, Kookmin University, Seoul 136-702, Korea

*Corresponding author: ckrhee@kaeri.re.kr, Phone: +82 42 868 8551, Fax: +82 42 868 4847

Nanosize powders have been of scientific and technological interest because of their specific properties that are not found in bulk materials. The electromagnetic and chemical reactivity, along with the optical properties from a large specific surface area allow the nanosize powders to be new material that bears a great potential for many important applications. In this work, Nanosize iron-metal and -oxide powders were synthesized by the pulsed wire evaporation (PWE) method, one of the gas condensation processes, which is known as one-step synthetic technique with high efficiency and high production rate compared with other wet processes involving several treatment steps [1].

The experimental setup for evaporating the wires to produce nanosize powders is shownin Fig. 1. The synthetic apparatus consists of four main components, the high voltage dc power supply, the capacitor bank, the high voltage gap switch, and the evaporation chamber. Pure iron wire (>99.9 %) with a diameter of 0.47 mm was used as a starting material and the feeding length of the wire into the reaction chamber was 88 mm. When a pulsed high voltage of 26 kV is driven through a thin wire, a non-equilibrium over-heating, which is induced in the wire, can evaporate the wire into plasma within several micro-seconds. The high-temperature plasma is cooled by an interaction with an ambient gas and condensed into small-size particles. The nanosize iron-metal powder was synthesized by evaporating a thin iron wire in argon inert gas and then an oxide passivation layer was added to the fresh powder by a slow oxygen filling with a flow rate of 3 mL/min for 30 min. X-ray diffraction (XRD) and transmission electron microscopy (TEM) measurements indicate that the spherical iron nanoparticles are about 55 nm in diameter and the thickness of the surface passivation layer is between 2 and 3 nm.

In the case of the iron-oxide powders, an argon-oxygen mixed ambient gas was supplied to the reaction chamber during the evaporation process, in which the total pressure of the mixed gas was about 1.3 bar. The phase analysis of the produced iron-oxide powders was systemically investigated using Mössbauer spectra, where the phase of Fe_2O_3 and Fe_3O_4 showed a strong dependence on the oxygen concentration in the mixed gas. The results suggest that classified nanosize iron-metal and -oxide powders can be obtained simply by controlling a well-designed ambient gas condition during the PWE process.

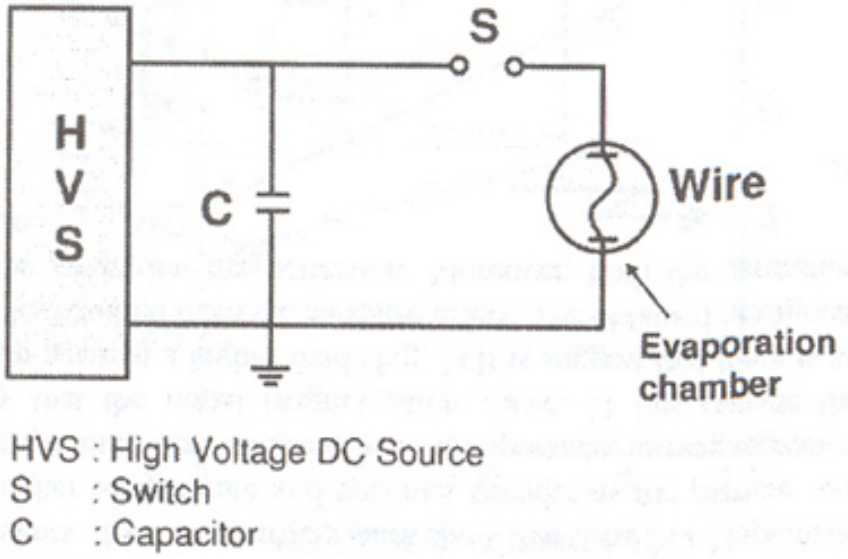

Fig. 1. Experimental setup for a pulsed wire evaporation.

REFERENCES

[1] Q. Wang, H. Tang, J. Shi, and G. Zou, Mater. Rev. Bull., **36**, 503 (2001).